S1	S0	Div/N	Mode
L	L	Not Specified	
L	M	2	PLL
L	H	3	PLL
M	L	4	PLL
M	M	5	PLL
M	H	6	PLL
H	L	7	PLL
H	M	8	PLL
H	H	16	CLKIN bypas

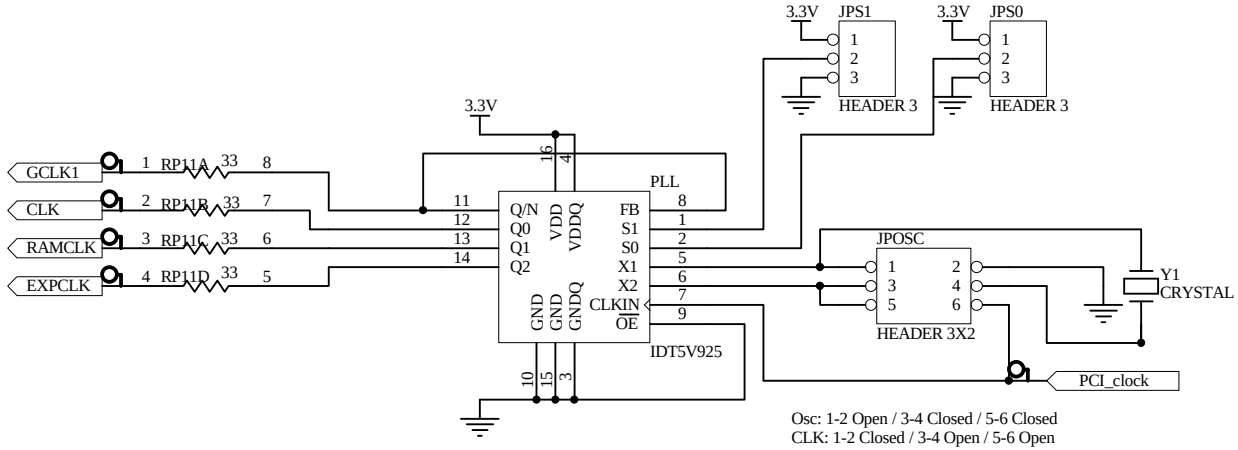

Osc: 1-2 Open / 3-4 Closed / 5-6 Closed
CLK: 1-2 Closed / 3-4 Open / 5-6 Open

Title: IIE-PCI: Clock generation		
Size: A4	Number	Revision: Ver. 1.0
Date: 14-Feb-2003	Sheet of	
File: H:\pci\proyecto\placa\version_1\pci\pci.ddb	Drawn By:	